MASTIN LAKE SANITARY SEWER RELOCATION

CITY OF HUNTSVILLE WATER POLLUTION CONTROL
HUNTSVILLE, ALABAMA

COH PROJECT NO. 71-20-SS02

PROJECT LOCATION

LOCATION MAP

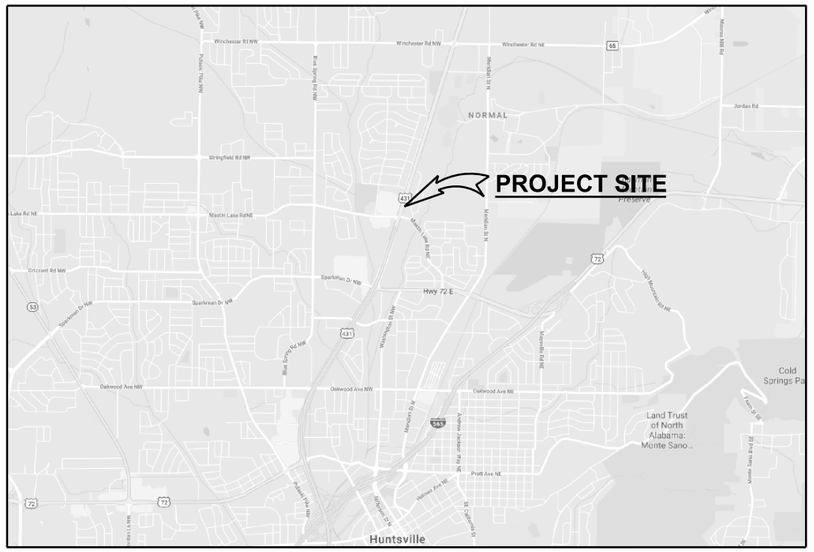

VICINITY MAP

NO SCALE

SHEET INDEX		
SHEET NO.	DWG. NO.	TITLE
1	G-001	COVER
2	G-002	LEGEND, ABBREVIATIONS AND NOTES
3	C-101	SS LINE 1 PLAN & PROFILE
4	C-102	SS LINE 2 PLAN & PROFILE
5	C-103	SS LINE 3 PLAN & PROFILE
6	C-104	SS LINE 4 PLAN & PROFILE
7	C-501	STANDARD DETAILS I
8	C-502	STANDARD DETAILS II
9	C-503	STANDARD DETAILS III

GARVER PROJECT NO. 19W10120
MARCH 2020

GARVER

5125A Research Drive
Huntsville, AL 35805
(256) 534-5512

HUNTSVILLE
The Star of Alabama

MAYOR
TOMMY BATTLE

CITY COUNCIL MEMBERS

DEVYN S. KEITH, PRESIDENT	-DISTRICT 1
FRANCES AKRIDGE	-DISTRICT 2
DR. JENNIE ROBINSON	-DISTRICT 3
BILL KLING, JR.	-DISTRICT 4
WILL CULVER	-DISTRICT 5

BID SET

GARVER

© 2018 GARVER, LLC
THIS DOCUMENT, ALONG WITH THE IDEAS AND DESIGNS CONVEYED HEREIN, SHALL BE CONSIDERED INSTRUMENTS OF PROFESSIONAL SERVICE AND ARE PROPERTY OF GARVER, LLC, ANY USE, REPRODUCTION, OR DISTRIBUTION OF THIS DOCUMENT, ALONG WITH THE IDEAS AND DESIGN CONTAINED HEREIN, IS PROHIBITED UNLESS AUTHORIZED IN WRITING BY GARVER, LLC OR EXPLICITLY ALLOWED IN THE GOVERNING PROFESSIONAL SERVICES AGREEMENT FOR THIS WORK.

5125A Research Drive
Huntsville, AL 35805
(256) 534-5512

COA # 500-E
Exp: 1/31/2020

ALABAMA LICENSED No. 38108-E PROFESSIONAL ENGINEER TREY D. TIDMORE

Digitally Signed 08/21/2020

BID SET

REV.	DATE	DESCRIPTION	BY

HUNTSVILLE The Star of Alabama

CITY OF HUNTSVILLE WATER POLLUTION CONTROL
HUNTSVILLE, ALABAMA

MASTIN LAKE SS RELOCATION

COVER SHEET

JOB NO.: 19W10120
DATE: MARCH 2020
DESIGNED BY: TDT
DRAWN BY: ECB

BAR IS ONE INCH ON ORIGINAL DRAWING
0 1"
IF NOT ONE INCH ON THIS SHEET, ADJUST SCALES ACCORDINGLY.

DRAWING NUMBER
G-001

SHEET NUMBER 01

HUNTSVILLE AL 3/12/2020 10:02:44 AM
W:\0RKSPACE\GARVER 0120-COVER.dgn
REVISED DATE:

LEGEND

- PROPOSED SANITARY SEWER
- SS — EXISTING SANITARY SEWER
- W — PROPOSED WATER LINE
- W — EXISTING WATER LINE
- G — PROPOSED GAS LINE
- G — EXISTING GAS LINE
- OE — EXISTING OVERHEAD ELECTRIC
- BT — EXISTING BURRIED TELEPHONE
- OT — EXISTING OVERHEAD TELEPHONE
- EXISTING STORM SEWER
- X — FENCE
- EXISTING ASPHALT ROAD
- GRAVEL ROAD OR DRIVE
- TREE LINE
- 675 — PROPOSED MAJOR CONTOUR
- PROPOSED MINOR CONTOUR
- 675 — EXISTING MAJOR CONTOUR
- EXISTING MINOR CONTOUR
- DITCH CENTER LINE
- 500 YR BFE — 500 YEAR BASE FLOOD EL.
- PL — PROPERTY LINE
- PROPERTY PIN
- EXISTING FIRE HYDRANT
- W — PROPOSED WATER VALVE
- W — EXISTING WATER VALVE
- WM — EXISTING WATER METER
- S — PROPOSED S. S. MANHOLE
- S — EXISTING S. S. MANHOLE
- SIGN
- TELE — TELEPHONE PEDESTAL
- G — PROPOSED GAS VALVE
- G — EXISTING GAS VALVE
- GM — PROPOSED GAS METER
- GM — EXISTING GAS METER
- EXISTING STORM INLET
- BENCH MARK
- UTILITY POLE
- LIGHT POLE
- GUIDE WIRE ANCHOR

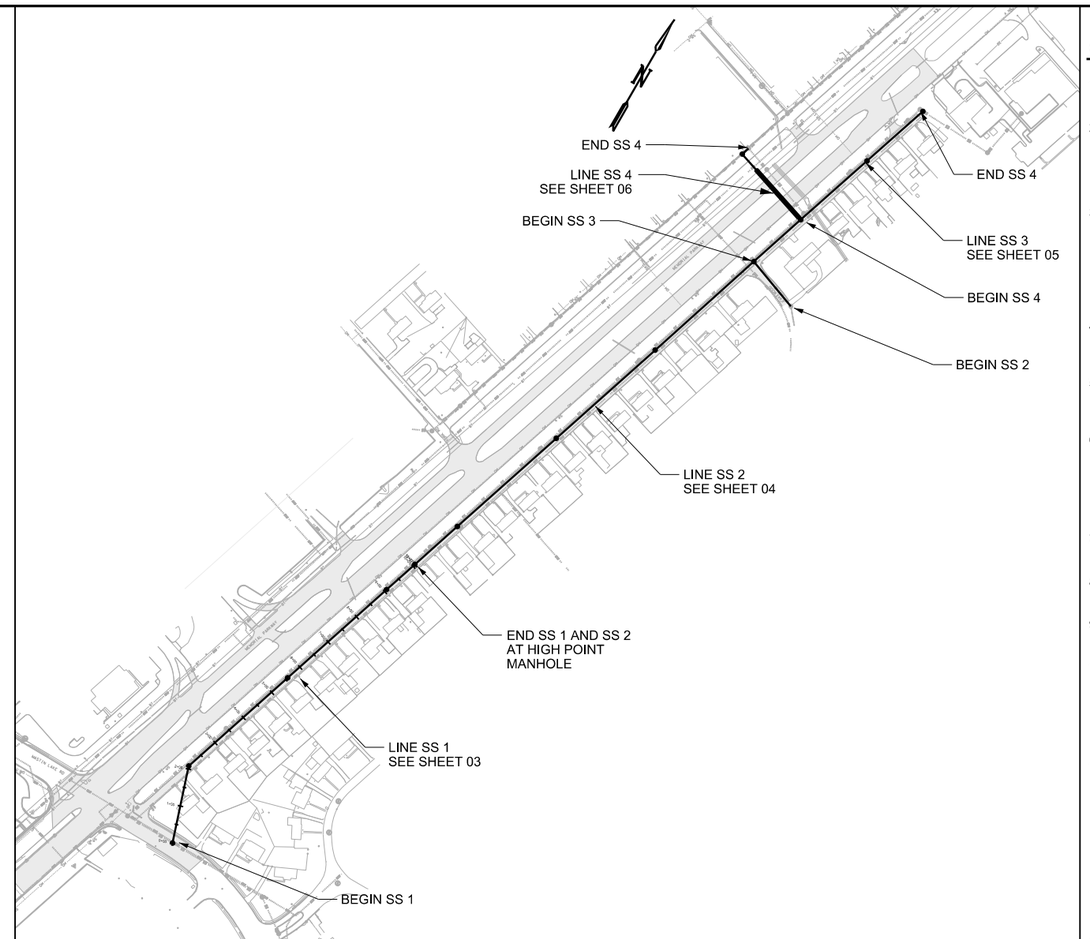

ABBREVIATIONS

ACQD	ACQUIRED
AL, ALUM	ALUMINUM
APPROX	APPROXIMATE
ASPH	ASPHALT
ATS	AUTOMATIC TRANS SWITCH
BM	BENCHMARK
CI	CAST IRON
CONC	CONCRETE
CP	CONTROL POINT
DIA	DIAMETER
DI, DIP	DUCTILE IRON PIPE
EA	EACH
ELEC	ELECTRICAL
EL, ELEV	ELEVATION
FIN GR	FINISH GRADE
FL	FLOW LINE
FLG	FLANGED
FT	FOOT
GRVL	GRAVEL
HDPE	HIGH-DENSITY POLYETHYLENE
H,HGT,HT	HEIGHT
HWY	HIGHWAY
ID	INSIDE DIAMETER
IN	INCHES
IN	VINVERT
LIN	LINEAL, LINEAR
LOC	LOCATION
MANUF	MANUFACTURER
MAX	MAXIMUM
MGD	MILLION GAL. PER DAY
MH	MANHOLE
MIN	MINIMUM
MISC	MISCELLANEOUS
MJ	MECHANICAL JOINT
N	NORTH
No.,#	NUMBER
NTS	NOT TO SCALE
OC	ON CENTER
OD	OUTSIDE DIAMETER
PE	PLAIN END
PP	POWER POLE
PSI	POUNDS PER SQUARE INCH
PVC	POLYVINYL CHLORIDE
R,RAD	RADIUS
RCP	REINFORCED CONCRTE PIPE
RED	REDUCER
REINF	REINFORCING
REQD	REQUIRED
RJ	RESTRAINED JOINT
ROW, ROWY	RIGHT OF WAY
SCH	SCHEDULE
SDBC	SOFT DRAWN BARE COPPER
SECT	SECTION
SF	SQUARE FEET
SHT	SHEET
SPECS	SPECIFICATIONS
SQ	SQUARE
SS	SANITARY SEWER
STA	STATION
ST STL, SS	STAINLESS STEEL
T&B	TOP AND BOTTOM
TBM	TEMPORARY BENCHMARK
TCE	TEMPORARY CONSTRUCTION EASEMENT
TEMP	TEMPORARY, TEMPERED
THK	THICKNESS
TYP	TYPICAL
W/	WITH
W/O	WITHOUT
WL	WATER LINE
WS	WATERSTOP

GENERAL NOTES:

1. SAFETY SHALL BE THE SOLE RESPONSIBILITY OF THE CONTRACTOR. THE ENGINEER SHALL NOT BE RESPONSIBLE FOR SAFETY, MEANS, OR METHODS OF THE CONTRACTOR.
2. THE CONTRACTOR SHALL BE RESPONSIBLE FOR CONTACTING ALL APPROPRIATE AGENCIES BEFORE WORK COMMENCES TO VERIFY THE TYPE, LOCATION, PROTECTION REQUIREMENTS, DEPTH OF ALL EXISTING UTILITIES, DRAINAGE FACILITIES, AND OTHER OBSTRUCTIONS. CONTRACTOR SHALL BE RESPONSIBLE FOR ALL COSTS ASSOCIATED WITH REPAIRING AND/OR REPLACING ANY SUCH ITEMS DAMAGED DURING CONSTRUCTION.
3. UTILITIES ON PLANS AND PROFILES ARE SHOWN IN APPROXIMATE LOCATIONS AND MAY BE AT ASSUMED ELEVATIONS. CONTRACTOR SHALL BE RESPONSIBLE FOR VERIFYING LOCATIONS OF EXISTING UTILITIES, OBSTRUCTIONS, AND DRAINAGE STRUCTURES BEFORE BEGINNING CONSTRUCTION. ALL EXISTING WATER, SEWER, PROCESS, AND/OR OTHER UTILITY LINES SHALL REMAIN ACTIVE THROUGHOUT CONSTRUCTION. CONTRACTOR SHALL BE RESPONSIBLE FOR PROTECTION OF EXISTING UTILITIES DURING CONSTRUCTION AND SATISFACTORY REPAIR OR REPLACEMENT OF DAMAGED FACILITIES.
4. CONTRACTOR SHALL LOCATE AND UNCOVER ALL POTENTIALLY CONFLICTING UTILITIES BEFORE FINAL ROUTES, CONSTRUCTION GRADES OR DEPTHS OF CUT ARE FINALIZED AND CONDUIT IS LAID. PRE-EXCAVATION ALONG CONDUIT ROUTES TO CHECK FOR CONFLICTS WILL BE REQUIRED.
5. APPROXIMATE LOCATIONS OF OVERHEAD POWER LINES MAY OR MAY NOT BE SHOWN ON PLANS. CONTRACTOR SHALL BE SOLELY RESPONSIBLE FOR VERIFYING ALL LOCATIONS IN THE FIELD AND PLAN WORK IN THESE AREAS ACCORDINGLY.
6. ALL TEMPORARY BENCHMARKS (TBM) AND/OR ELEVATIONS OR EXISTING STRUCTURES FOR THE PROJECT ARE SHOWN IN THE PLANS. CONTRACTOR SHALL VERIFY LOCATIONS AND ELEVATIONS WITH ENGINEER PRIOR TO BEGINNING THE WORK. CONTRACTOR IS RESPONSIBLE FOR ALL EASEMENT OR ROW SURVEYS REQUIRED TO COMPLETE THE WORK. ROW, PROPERTY, AND/OR EASEMENT BOUNDARIES SHOWN ON PLANS ARE APPROXIMATE AND FOR GENERAL REFERENCE ONLY.
7. ALL EXCAVATION BACKFILL SHALL BE COMPACTED TO MIN 95% STANDARD PROCTOR DENSITY TO PREVENT SETTLEMENT.
8. ALL LANDSCAPED AREAS AFFECTED BY CONSTRUCTION SHALL BE REPLACED AND RESTORED IN-KIND (UNLESS SPECIFICALLY NOTED ON THE PLANS).
9. CONTRACTOR SHALL BE RESPONSIBLE FOR THE PROPER DISPOSAL OF ANY EXCESS MATERIALS RESULTING FROM THE WORK.
10. THE CONTRACTOR SHALL COMPLY WITH ALL LOCAL, STATE, AND FEDERAL STATUTES AND REGULATIONS GOVERNING BLASTING. CONTRACTOR SHALL NOT BLAST ADJACENT TO ANY ACTIVE SEWER MORE DISTANCE THAN HE CAN LAY (OR REPLACE) DURING THE SAME DAY. PRE-BLAST SURVEY AND SEISMOGRAPHS REQUIRED FOR ALL BLASTING EVENTS. CONTRACTOR IS SOLELY AND FULLY RESPONSIBLE FOR DESIGNING BLASTING OPERATIONS TO PREVENT DAMAGING SURROUNDING PROPERTIES, UTILITIES, STRUCTURES, ETC.
11. ALABAMA STATE LAW, THE UNDERGROUND FACILITIES DAMAGE PREVENTION ACT, REQUIRES TWO WORKING DAYS ADVANCE NOTIFICATION THROUGH THE ALABAMA ONE-CALL SYSTEM CENTER BEFORE EXCAVATING USING MECHANIZED EQUIPMENT OR EXPLOSIVES (EXCEPT IN THE CASE OF AN EMERGENCY). THE ONE-CALL SYSTEM PHONE NUMBER IS 1-800-292-8525. THE CONTRACTOR IS ADVISED THAT THERE IS A SEVERE PENALTY FOR NOT MAKING THIS CALL. NOT ALL UTILITY COMPANIES ARE MEMBERS OF THE ALABAMA ONE-CALL SYSTEM; THEREFORE, THE CONTRACTOR IS ADVISED TO CONTACT ALL NON-MEMBER UTILITIES AS WELL AS THE ONE-CALL SYSTEM.
12. THE CONTRACTOR SHALL USE APPROPRIATE METHODS TO PREVENT SOIL EROSION DURING CONSTRUCTION.

PROJECT SPECIFIC NOTES:

1. SANITARY SEWER RELOCATION NECESSITATED BY ROAD IMPROVEMENTS TO BE PERFORMED ON MEMORIAL PARKWAY/HIGHWAY 481. ALDOT PROJECT NUMBER NHF-8510 (009)
2. PROPOSED STORM SEWER SHOWN IN PLAN AND PROFILE SHEETS TO BE CONSTRUCTED THROUGH ALDOT PROJECT NUMBER NHF-8510 (009) WILL NOT BE CONSTRUCTED AT TIME OF SANITARY SEWER RELOCATION. CONTRACTOR SHALL BE RESPONSIBLE FOR SANITARY SEWER CONSTRUCTION SO THAT SANITARY SEWER WILL NOT CONFLICT WITH PROPOSED STORM SEWER
3. CONTRACTOR SHALL BE RESPONSIBLE FOR COORDINATION WITH HUNTSVILLE UTILITIES TO ENSURE NO CONFLICTS ARE PRESENT WITH UTILITY RELOCATION.

GARVER

© 2018 GARVER, LLC
THIS DOCUMENT, ALONG WITH THE IDEAS AND DESIGNS CONVEYED HEREIN, SHALL BE CONSIDERED INSTRUMENTS OF PROFESSIONAL SERVICE AND ARE PROPERTY OF GARVER, LLC, ANY USE, REPRODUCTION, OR DISTRIBUTION OF THIS DOCUMENT, ALONG WITH THE IDEAS AND DESIGN CONTAINED HEREIN, IS PROHIBITED UNLESS AUTHORIZED IN WRITING BY GARVER, LLC OR EXPLICITLY ALLOWED IN THE GOVERNING PROFESSIONAL SERVICES AGREEMENT FOR THIS WORK.

5125A Research Drive
Huntsville, AL 35805
(256) 534-5512
COA # 500-E
Exp: 1/31/2021

ALABAMA LICENSED No. 38108-E PROFESSIONAL ENGINEER TREY D. TIDMORE

Digitally Signed 08/21/2020

BID SET

REV.	DATE	DESCRIPTION	BY

HUNTSVILLE The Star of Alabama

CITY OF HUNTSVILLE
WATER POLLUTION CONTROL
HUNTSVILLE, ALABAMA

MASTIN LAKE SS RELOCATION

LEGEND, ABBREVIATIONS AND NOTES

JOB NO.: 19W10120
DATE: MARCH 2020
DESIGNED BY: TDT
DRAWN BY: ECB

BAR IS ONE INCH ON ORIGINAL DRAWING
0 1"
IF NOT ONE INCH ON THIS SHEET, ADJUST SCALES ACCORDINGLY.

DRAWING NUMBER
G-002

SHEET NUMBER 02

HUNTSVILLE AL 3/24/2020 9:03:45 AM
WORKSPACE:GARVER
0120-G002-GN.dgn
REVISED DATE:

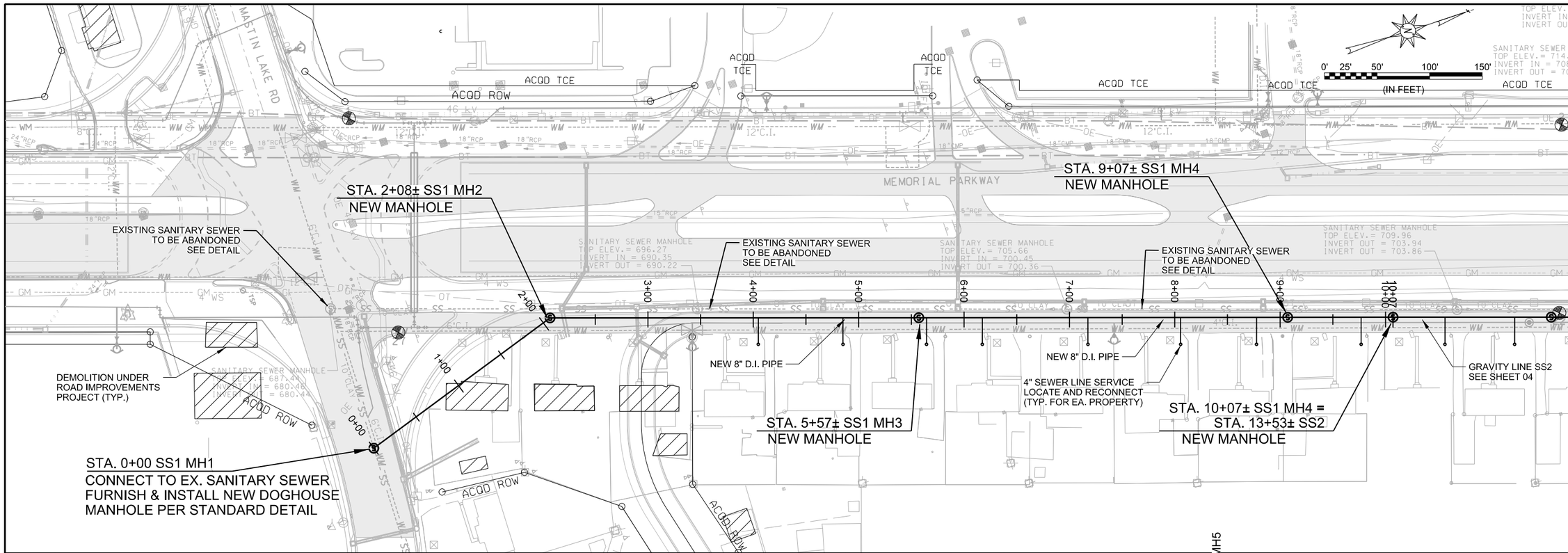

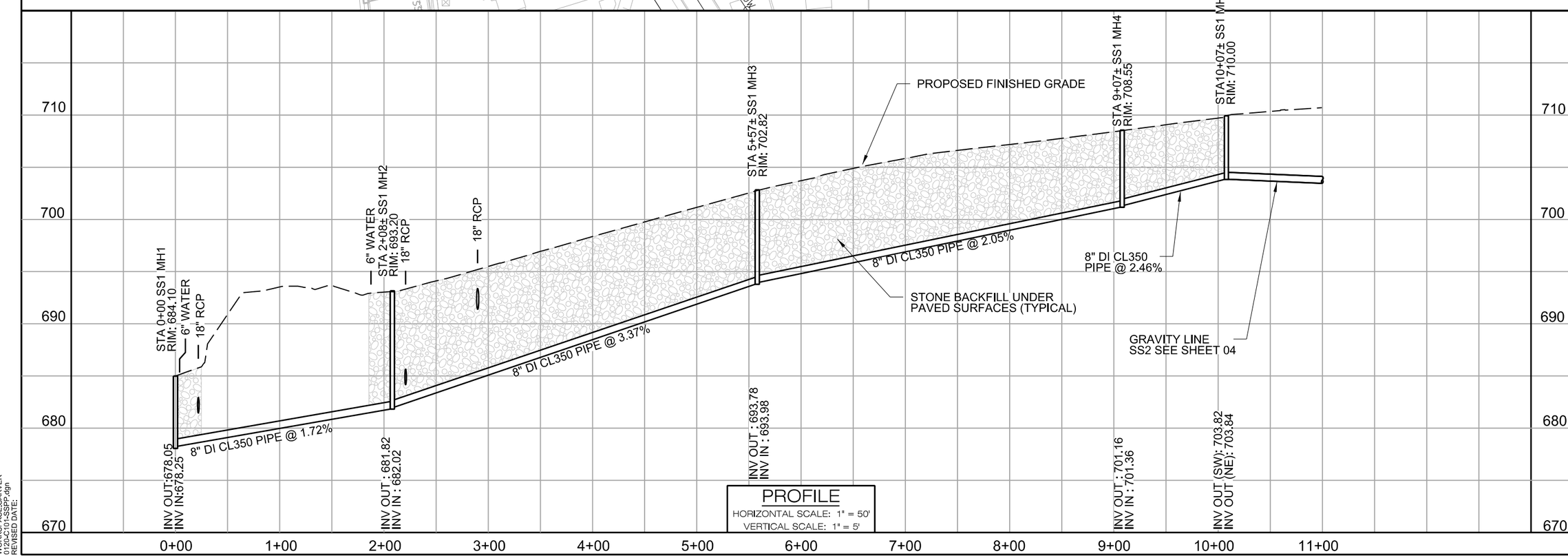

PROFILE
HORIZONTAL SCALE: 1" = 50'
VERTICAL SCALE: 1" = 5'

GARVER

© 2018 GARVER, LLC
THIS DOCUMENT, ALONG WITH THE IDEAS AND DESIGNS CONVEYED HEREIN, SHALL BE CONSIDERED INSTRUMENTS OF PROFESSIONAL SERVICE AND ARE PROPERTY OF GARVER, LLC, ANY USE, REPRODUCTION, OR DISTRIBUTION OF THIS DOCUMENT, ALONG WITH THE IDEAS AND DESIGN CONTAINED HEREIN, IS PROHIBITED UNLESS AUTHORIZED IN WRITING BY GARVER, LLC OR EXPLICITLY ALLOWED IN THE GOVERNING PROFESSIONAL SERVICES AGREEMENT FOR THIS WORK.

5125A Research Drive
Huntsville, AL 35805
(256) 534-5512

COA # 500-E
Exp: 1/31/2021

ALABAMA LICENSED No. 38108-E PROFESSIONAL ENGINEER TREY D. TIDMORE

Digitally Signed 08/21/2020

BID SET

REV.	DATE	DESCRIPTION	BY

HUNTSVILLE The Star of Alabama

CITY OF HUNTSVILLE
WATER POLLUTION CONTROL
HUNTSVILLE, ALABAMA

MASTIN LAKE SS RELOCATION

SS LINE 1
PLAN & PROFILE

JOB NO.: 19W10120
DATE: MARCH 2020
DESIGNED BY: TDT
DRAWN BY: ECB

BAR IS ONE INCH ON ORIGINAL DRAWING
0 1"
IF NOT ONE INCH ON THIS SHEET, ADJUST SCALES ACCORDINGLY.

DRAWING NUMBER
C-101

SHEET NUMBER 03

HUNTSVILLE AL 3/24/2020 9:07:06 AM
WORKSPACE:GARVER
0120-C101-SSPP.dgn
REVISED DATE:

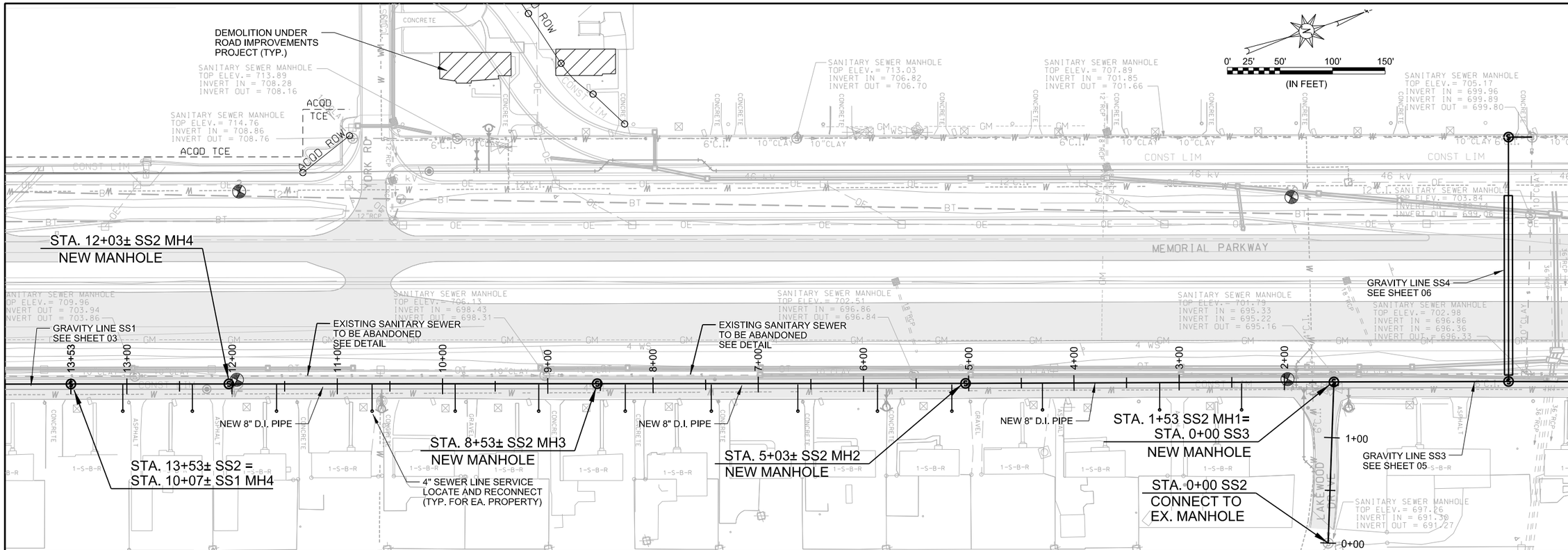

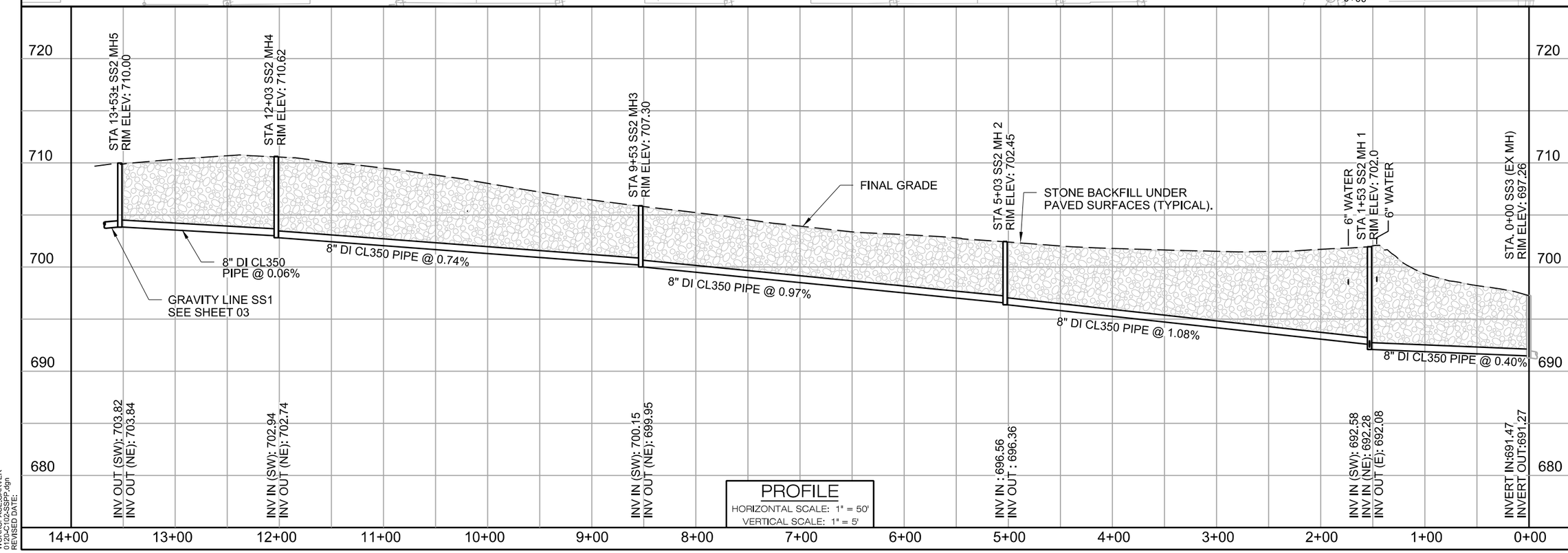

GARVER

© 2018 GARVER, LLC
THIS DOCUMENT, ALONG WITH THE IDEAS AND DESIGNS CONVEYED HEREIN, SHALL BE CONSIDERED INSTRUMENTS OF PROFESSIONAL SERVICE AND ARE PROPERTY OF GARVER, LLC, ANY USE, REPRODUCTION, OR DISTRIBUTION OF THIS DOCUMENT, ALONG WITH THE IDEAS AND DESIGN CONTAINED HEREIN, IS PROHIBITED UNLESS AUTHORIZED IN WRITING BY GARVER, LLC OR EXPLICITLY ALLOWED IN THE GOVERNING PROFESSIONAL SERVICES AGREEMENT FOR THIS WORK.

5125A Research Drive
Huntsville, AL 35805
(256) 534-5512
COA # 500-E
Exp: 1/31/2021

ALABAMA LICENSED No. 38108-E PROFESSIONAL ENGINEER TREY D. TIDMORE

Digitally Signed 08/21/2020

BID SET

REV.	DATE	DESCRIPTION	BY

HUNTSVILLE The Star of Alabama

CITY OF HUNTSVILLE
WATER POLLUTION CONTROL
HUNTSVILLE, ALABAMA

MASTIN LAKE
SS RELOCATION

SS LINE 2
PLAN & PROFILE

JOB NO.: 19W10120
DATE: MARCH 2020
DESIGNED BY: TDT
DRAWN BY: ECB

BAR IS ONE INCH ON ORIGINAL DRAWING
0 1"
IF NOT ONE INCH ON THIS SHEET, ADJUST SCALES ACCORDINGLY.

DRAWING NUMBER
C-102

SHEET NUMBER 04

HUNTSVILLE AL 3/24/2020 9:07:39 AM
W:\0RK\SPACE\GARVER
0120-C102-SSPP.dgn
REVISED DATE:

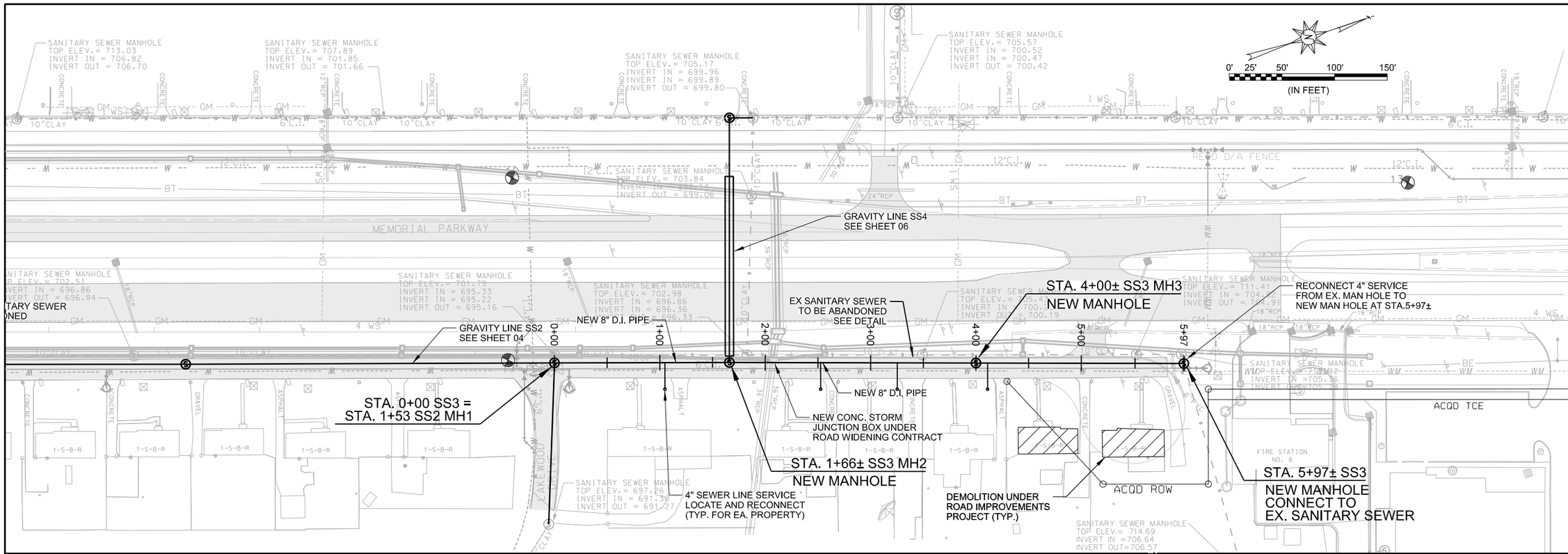

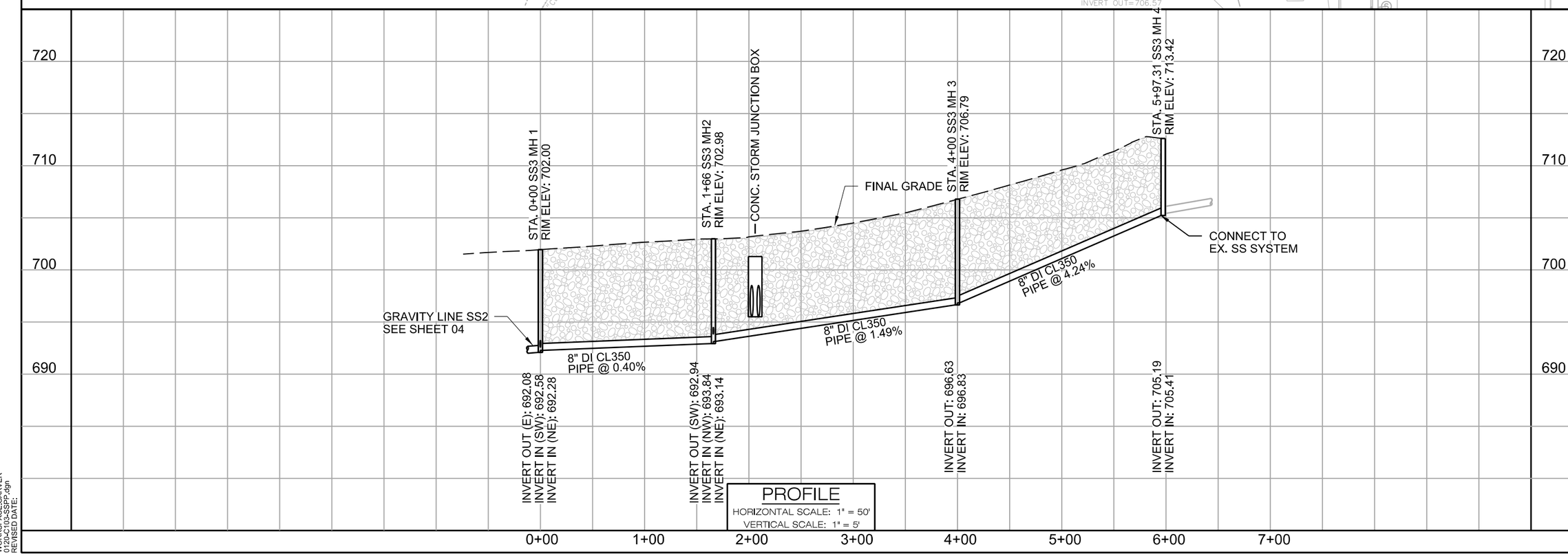

GARVER

© 2018 GARVER, LLC
THIS DOCUMENT, ALONG WITH THE IDEAS AND DESIGNS CONVEYED HEREIN, SHALL BE CONSIDERED INSTRUMENTS OF PROFESSIONAL SERVICE AND ARE PROPERTY OF GARVER, LLC. ANY USE, REPRODUCTION, OR DISTRIBUTION OF THIS DOCUMENT, ALONG WITH THE IDEAS AND DESIGN CONTAINED HEREIN, IS PROHIBITED UNLESS AUTHORIZED IN WRITING BY GARVER, LLC OR EXPLICITLY ALLOWED IN THE GOVERNING PROFESSIONAL SERVICES AGREEMENT FOR THIS WORK.

5125A Research Drive
Huntsville, AL 35805
(256) 534-5512

COA # 500-E
Exp: 1/31/2020

ALABAMA LICENSED No. 38108-E PROFESSIONAL ENGINEER TREY D. TIDMORE

Digitally Signed 08/21/2020

BID SET

REV.	DATE	DESCRIPTION	BY

HUNTSVILLE The Star of Alabama

CITY OF HUNTSVILLE
WATER POLLUTION CONTROL
HUNTSVILLE, ALABAMA

MASTIN LAKE
SS RELOCATION

SS LINE 3
PLAN & PROFILE

JOB NO.: 19W10120
DATE: MARCH 2020
DESIGNED BY: TDT
DRAWN BY: ECB

BAR IS ONE INCH ON ORIGINAL DRAWING
0 1"
IF NOT ONE INCH ON THIS SHEET, ADJUST SCALES ACCORDINGLY.

DRAWING NUMBER
C-103

SHEET NUMBER 05

HUNTSVILLE AL 3/24/2020 9:08:04 AM
WORKSPACE:GARVER
0120-C103-SSPP.dgn
REVISED DATE:

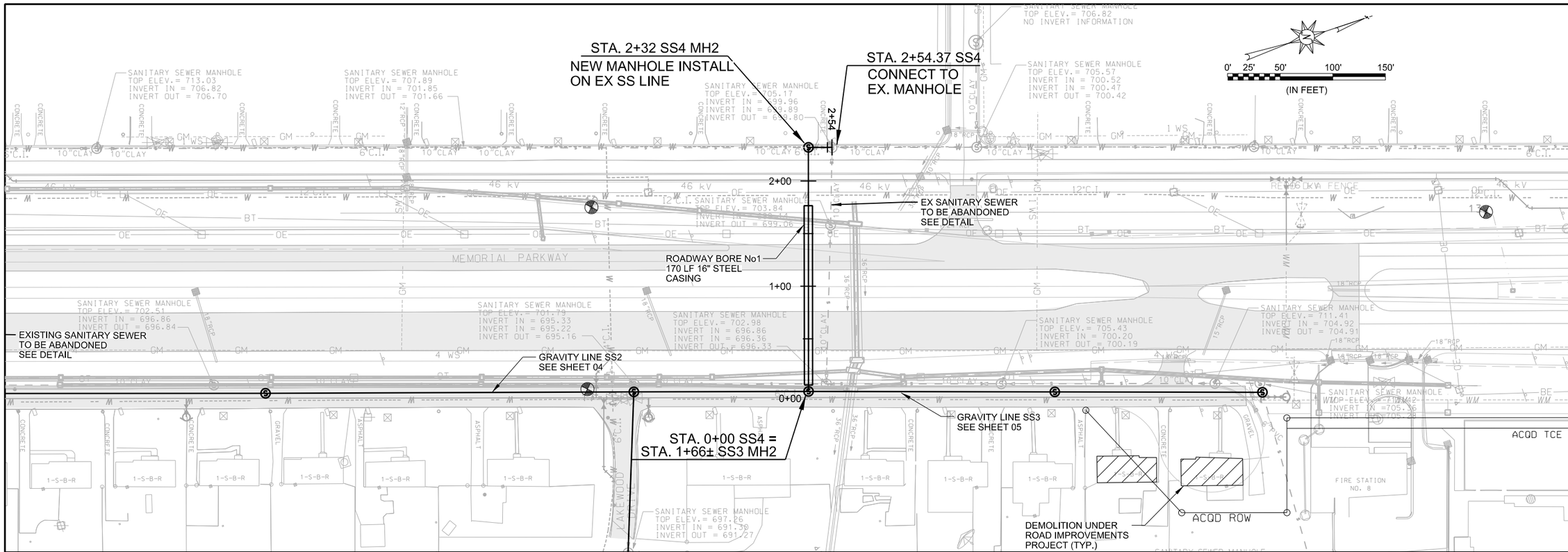

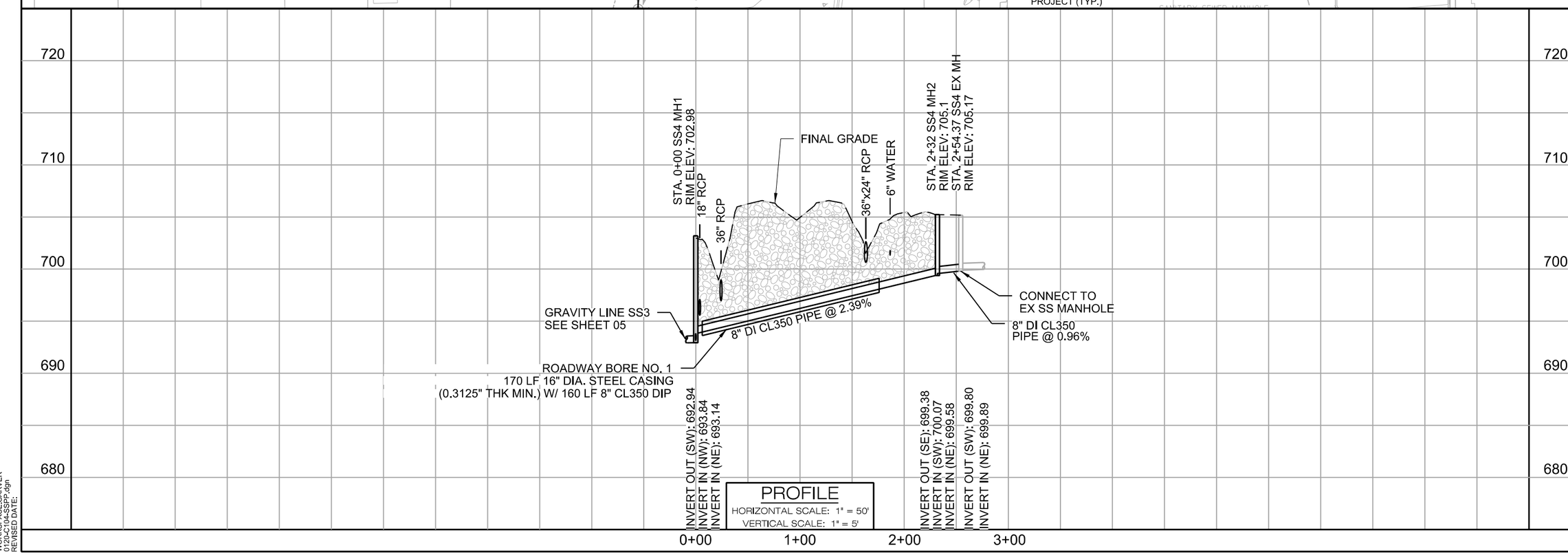

GARVER

© 2018 GARVER, LLC
THIS DOCUMENT, ALONG WITH THE IDEAS AND DESIGNS CONVEYED HEREIN, SHALL BE CONSIDERED INSTRUMENTS OF PROFESSIONAL SERVICE AND ARE PROPERTY OF GARVER, LLC, ANY USE, REPRODUCTION, OR DISTRIBUTION OF THIS DOCUMENT, ALONG WITH THE IDEAS AND DESIGN CONTAINED HEREIN, IS PROHIBITED UNLESS AUTHORIZED IN WRITING BY GARVER, LLC OR EXPLICITLY ALLOWED IN THE GOVERNING PROFESSIONAL SERVICES AGREEMENT FOR THIS WORK.

5125A Research Drive
Huntsville, AL 35805
(256) 534-5512

COA # 500-E
Exp: 1/31/2020

ALABAMA LICENSED No. 38108-E PROFESSIONAL ENGINEER TREY D. TIDMORE

Digitally Signed 08/21/2020

BID SET

REV.	DATE	DESCRIPTION	BY

HUNTSVILLE The Star of Alabama

CITY OF HUNTSVILLE
WATER POLLUTION CONTROL
HUNTSVILLE, ALABAMA

MASTIN LAKE SS RELOCATION

SS LINE 4
PLAN & PROFILE

JOB NO.: 19W10120
DATE: MARCH 2020
DESIGNED BY: TDT
DRAWN BY: ECB

BAR IS ONE INCH ON ORIGINAL DRAWING
0 1"
IF NOT ONE INCH ON THIS SHEET, ADJUST SCALES ACCORDINGLY.

DRAWING NUMBER
C-104

SHEET NUMBER 06

HUNTSVILLE AL 3/24/2020 9:08:32 AM
W:\RK\SPACE\GARVER
0120-C104-SSPP.dgn
REVISED DATE:

STA. 2+32 SS4 MH2
NEW MANHOLE INSTALL
ON EX SS LINE

STA. 2+54.37 SS4
CONNECT TO
EX. MANHOLE

SANITARY SEWER MANHOLE
TOP ELEV. = 713.03
INVERT IN = 706.82
INVERT OUT = 706.70

SANITARY SEWER MANHOLE
TOP ELEV. = 707.89
INVERT IN = 701.85
INVERT OUT = 701.66

SANITARY SEWER MANHOLE
TOP ELEV. = 705.17
INVERT IN = 699.96
INVERT IN = 699.89
INVERT OUT = 699.80

SANITARY SEWER MANHOLE
TOP ELEV. = 706.82
NO INVERT INFORMATION

SANITARY SEWER MANHOLE
TOP ELEV. = 705.57
INVERT IN = 700.52
INVERT IN = 700.47
INVERT OUT = 700.42

0' 25' 50' 100' 150'
(IN FEET)

2+00

EX SANITARY SEWER
TO BE ABANDONED
SEE DETAIL

SANITARY SEWER MANHOLE
TOP ELEV. = 703.84
INVERT IN = 699.14
INVERT OUT = 699.06

MEMORIAL PARKWAY

ROADWAY BORE No1
170 LF 16" STEEL
CASING

1+00

SANITARY SEWER MANHOLE
TOP ELEV. = 702.51
INVERT IN = 696.86
INVERT OUT = 696.84

EXISTING SANITARY SEWER
TO BE ABANDONED
SEE DETAIL

SANITARY SEWER MANHOLE
TOP ELEV. = 701.79
INVERT IN = 695.33
INVERT IN = 695.22
INVERT OUT = 695.16

SANITARY SEWER MANHOLE
TOP ELEV. = 702.98
INVERT IN = 696.86
INVERT IN = 696.36
INVERT OUT = 696.33

SANITARY SEWER MANHOLE
TOP ELEV. = 705.43
INVERT IN = 700.20
INVERT OUT = 700.19

SANITARY SEWER MANHOLE
TOP ELEV. = 711.41
INVERT IN = 704.92
INVERT OUT = 704.91

GRAVITY LINE SS2
SEE SHEET 04

0+00

GRAVITY LINE SS3
SEE SHEET 05

STA. 0+00 SS4 =
STA. 1+66± SS3 MH2

SANITARY SEWER MANHOLE
TOP ELEV. = 697.26
INVERT IN = 691.30
INVERT OUT = 691.27

SANITARY SEWER MANHOLE
TOP ELEV. = 705.26
INVERT IN = 705.16
INVERT OUT = 705.28

ACQD TCE

FIRE STATION
NO. 8

ACQD ROW

DEMOLITION UNDER
ROAD IMPROVEMENTS
PROJECT (TYP.)

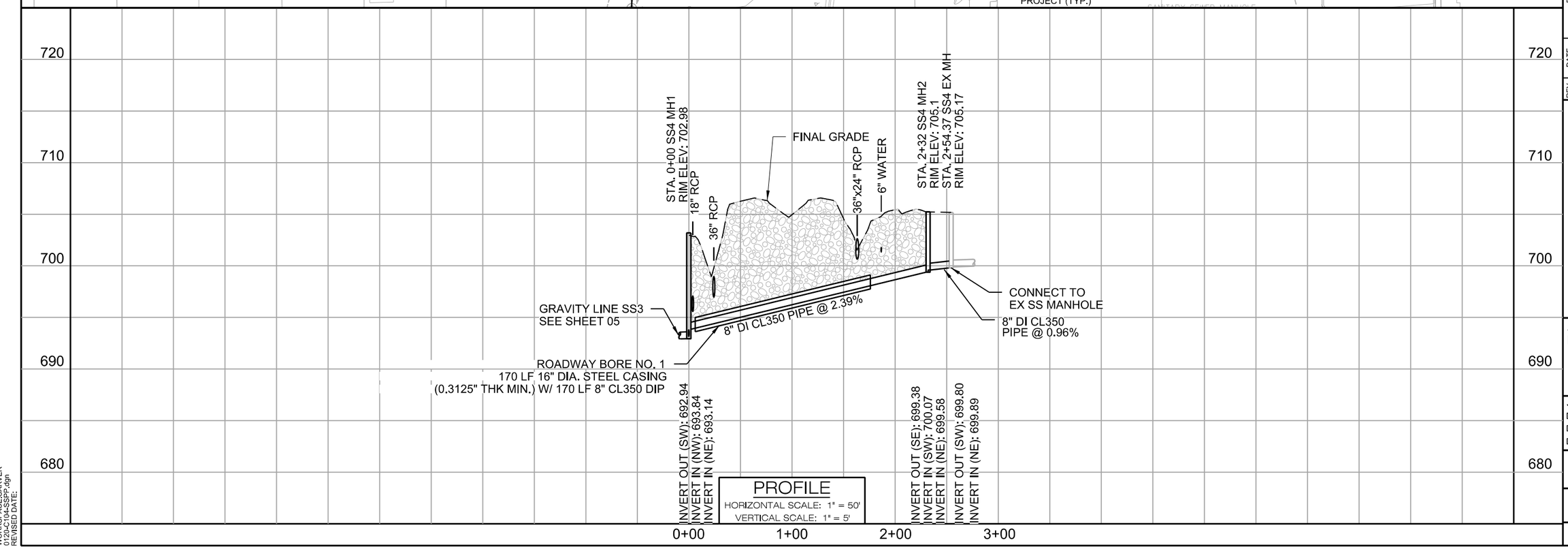

GARVER

© 2018 GARVER, LLC
THIS DOCUMENT, ALONG WITH THE IDEAS AND DESIGNS CONVEYED HEREIN, SHALL BE CONSIDERED INSTRUMENTS OF PROFESSIONAL SERVICE AND ARE PROPERTY OF GARVER, LLC, ANY USE, REPRODUCTION, OR DISTRIBUTION OF THIS DOCUMENT, ALONG WITH THE IDEAS AND DESIGN CONTAINED HEREIN, IS PROHIBITED UNLESS AUTHORIZED IN WRITING BY GARVER, LLC OR EXPLICITLY ALLOWED IN THE GOVERNING PROFESSIONAL SERVICES AGREEMENT FOR THIS WORK.

5125A Research Drive
Huntsville, AL 35805
(256) 534-5512

COA # 500-E
Exp: 1/31/2020

ALABAMA LICENSED No. 38108-E PROFESSIONAL ENGINEER TREY D. TIDMORE

Digitally Signed 08/21/2020

BID SET

REV.	DATE	DESCRIPTION	BY

HUNTSVILLE The Star of Alabama

CITY OF HUNTSVILLE
WATER POLLUTION
CONTROL
HUNTSVILLE, ALABAMA

MASTIN LAKE
SS RELOCATION

SS LINE 4
PLAN & PROFILE

JOB NO.: 19W10120
DATE: MARCH 2020
DESIGNED BY: TDT
DRAWN BY: ECB

BAR IS ONE INCH ON ORIGINAL DRAWING
0 1"
IF NOT ONE INCH ON THIS SHEET, ADJUST SCALES ACCORDINGLY.

DRAWING NUMBER
C-104

SHEET NUMBER 06

HUNTSVILLE AL 8/21/2020 4:19:00 PM
W:\RK\SPACE\GARVER
0120-C104-SSPP.dgn
REVISED DATE:

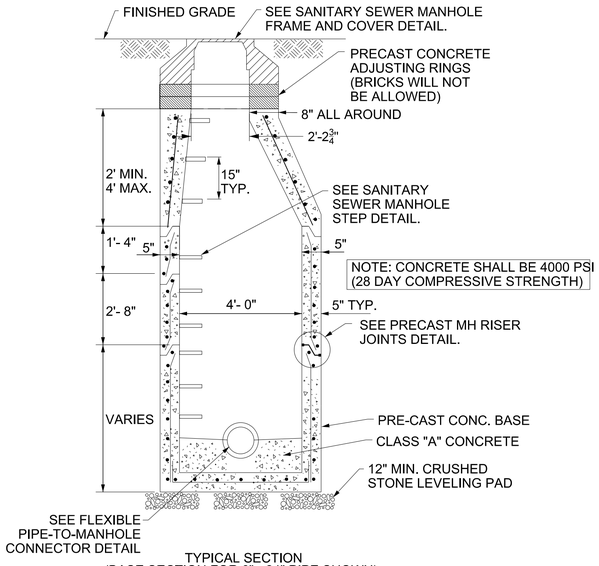

NOTE: CONCRETE SHALL BE 4000 PSI (28 DAY COMPRESSIVE STRENGTH)

TYPICAL SECTION
(BASE SECTION FOR 6" - 24" PIPE SHOWN)

NOTE: FOR MANHOLES LESS THAN 4.5' IN DEPTH, CONTRACTOR SHALL PROVIDE A SPECIAL ORDER MANHOLE OR A POURED-IN-PLACE MANHOLE AS APPROVED BY THE ENGINEER.

1 / C501 STANDARD SANITARY SEWER MANHOLE DETAIL

NOT TO SCALE

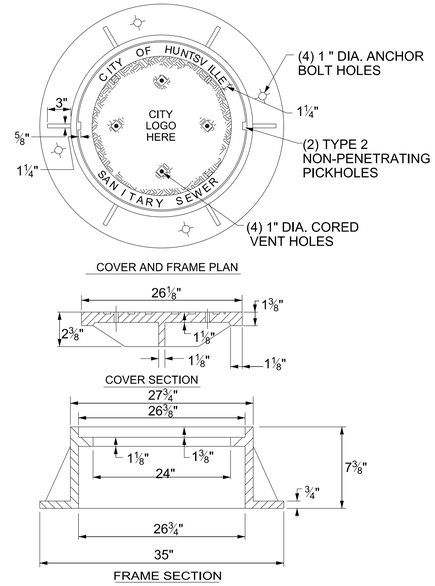

NOTE: VULCAN FOUNDRY INC. V-1355 FRAME AND COVER OR APPROVED EQUAL.

NOTE: WATERPROOF BOWL SHALL BE INSERTED IN ALL WATERPROOF MANHOLES AS PER SPECIFICATIONS.

2 / C501 SANITARY SEWER MANHOLE FRAME AND COVER DETAIL

NOT TO SCALE

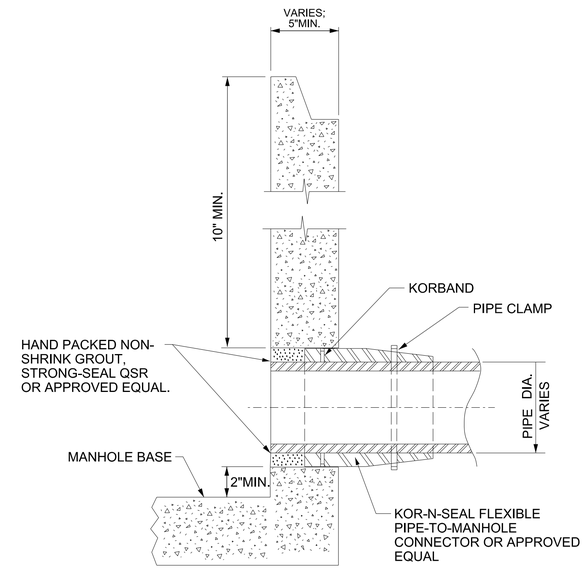

3 / C501 FLEXIBLE PIPE-TO-MANHOLE CONNECTOR DETAIL

NOT TO SCALE

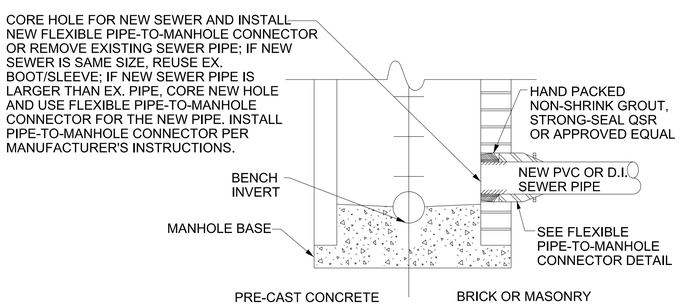

4 / C501 CONNECTION OF NEW SEWER TO EXISTING MANHOLE

NOT TO SCALE

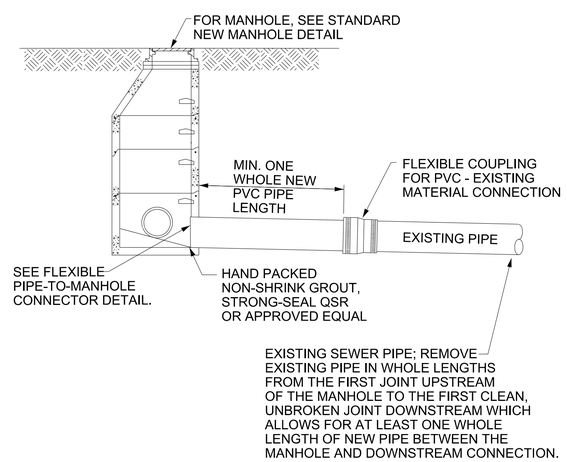

5 / C501 CONNECTION OF NEW MANHOLE TO EXISTING SEWER

NOT TO SCALE

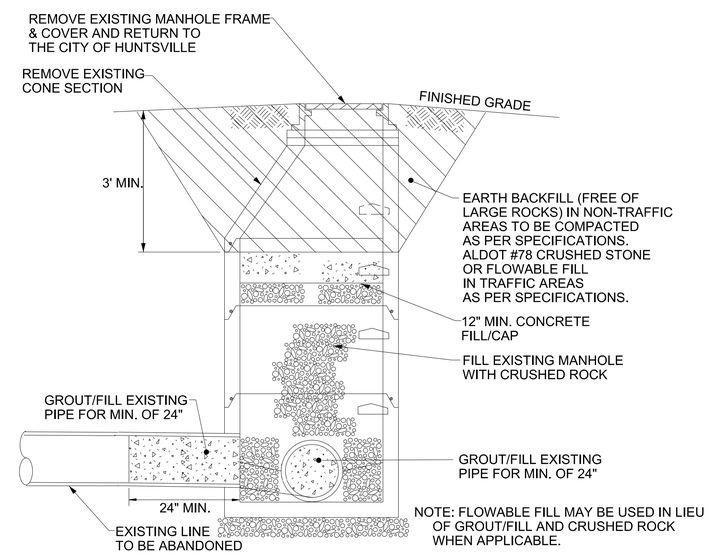

NOTE: FLOWABLE FILL MAY BE USED IN LIEU OF GROUT/FILL AND CRUSHED ROCK WHEN APPLICABLE.

6 / C501 ABANDONMENT OF EXISTING MANHOLE AND LINE

NOT TO SCALE

GARVER

© 2018 GARVER, LLC
THIS DOCUMENT, ALONG WITH THE IDEAS AND DESIGNS CONVEYED HEREIN, SHALL BE CONSIDERED INSTRUMENTS OF PROFESSIONAL SERVICE AND ARE PROPERTY OF GARVER, LLC. ANY USE, REPRODUCTION, OR DISTRIBUTION OF THIS DOCUMENT, ALONG WITH THE IDEAS AND DESIGN CONTAINED HEREIN, IS PROHIBITED UNLESS AUTHORIZED IN WRITING BY GARVER, LLC OR EXPLICITLY ALLOWED IN THE GOVERNING PROFESSIONAL SERVICES AGREEMENT FOR THIS WORK.

5125A Research Drive
Huntsville, AL 35805
(256) 534-5512
COA # 500-E
Exp: 1/31/2021

ALABAMA LICENSED No. 38108-E PROFESSIONAL ENGINEER TREY D. TIDMORE

Digitally Signed 08/21/2020

BID SET

REV.	DATE	DESCRIPTION	BY

HUNTSVILLE The Star of Alabama

CITY OF HUNTSVILLE WATER POLLUTION CONTROL
HUNTSVILLE, ALABAMA

MASTIN LAKE SS RELOCATION

STANDARD DETAILS I

JOB NO.: 19W10120
DATE: MARCH 2020
DESIGNED BY: TDT
DRAWN BY: ECB

BAR IS ONE INCH ON ORIGINAL DRAWING
0 1"
IF NOT ONE INCH ON THIS SHEET, ADJUST SCALES ACCORDINGLY.

DRAWING NUMBER
C-501

SHEET NUMBER 07

HUNTSVILLE AL 8/21/2020 3:29:11 PM
WORKSPACE:GARVER
0120-C101-DT.dgn
REVISED DATE:

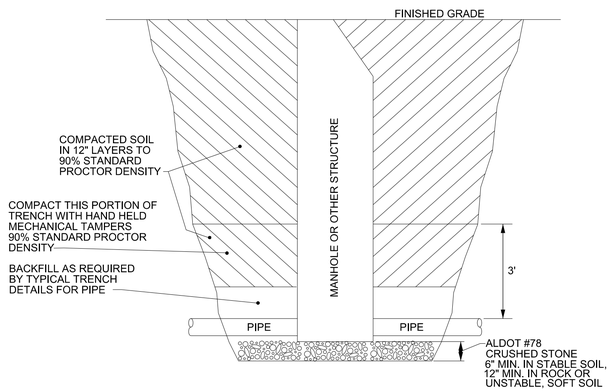

IN NON-TRAFFIC AREAS

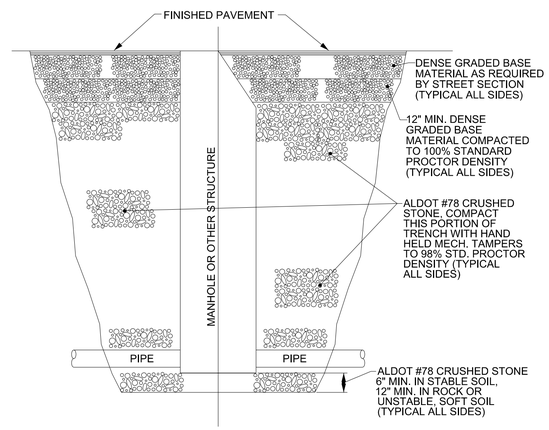

WITHIN TRAFFIC AREAS

NOTE: TRAFFIC AREAS SHALL EXTEND TO 5 FT BEYOND BACK OF CURB OR EDGE OF PAVEMENT, UNLESS OTHERWISE NOTED ON PLAN VIEW.

1 / C502 BEDDING AND BACKFILL REQUIREMENTS AROUND MANHOLES AND OTHER DRAINAGE AND SANITARY SEWER STRUCTURES

NOT TO SCALE

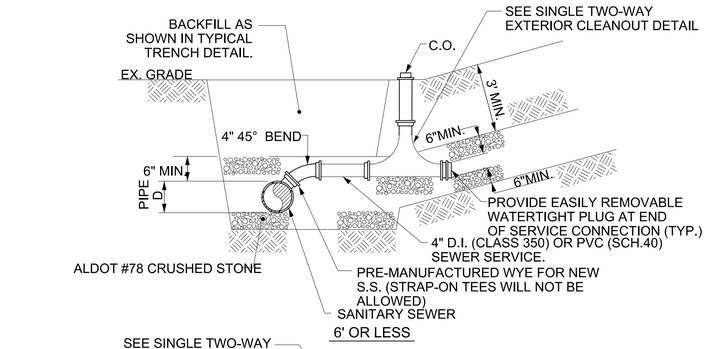

6' OR LESS

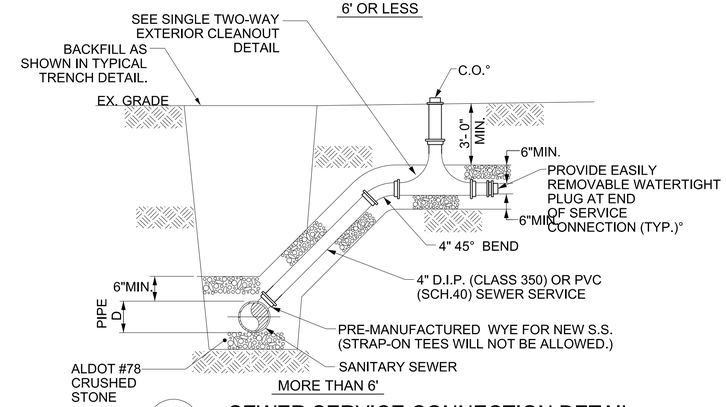

MORE THAN 6'

3 / C502 SEWER SERVICE CONNECTION DETAIL

NOT TO SCALE

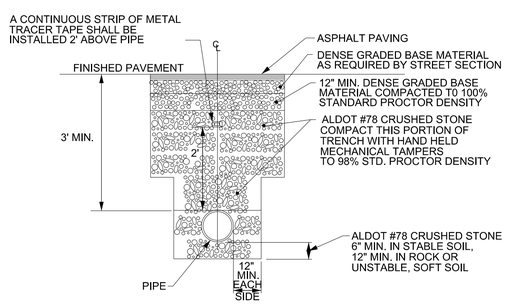

IN TRAFFIC AREAS

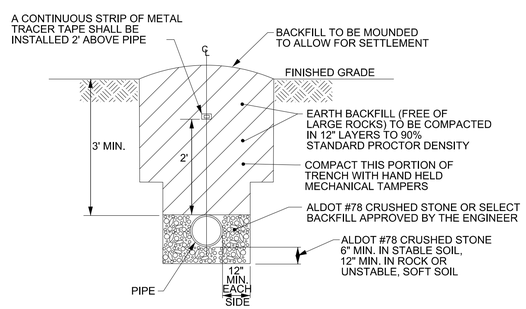

DUCTILE IRON OR REINFORCED CONCRETE PIPE IN NON-TRAFFIC AREA

4 / C502 TYPICAL TRENCH DETAILS FOR SANITARY SEWER

NOT TO SCALE

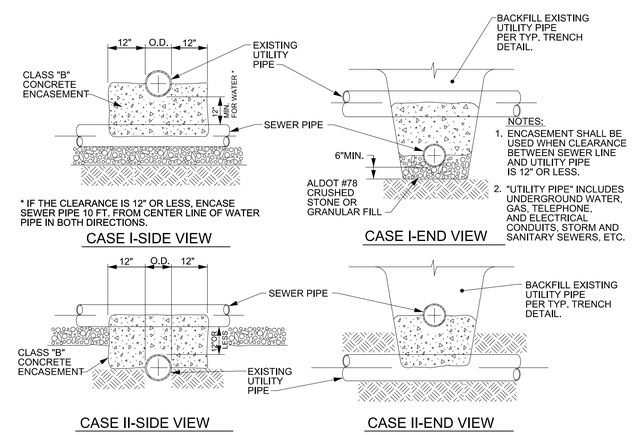

6 / C502 UTILITY CROSSING DETAILS

NOT TO SCALE

HUNTSVILLE AL 8/21/2020 3:44:53 PM
WORKSPACE:GARVER
0120-C101-DT.dgn
REVISED DATE:

GARVER

© 2018 GARVER, LLC
THIS DOCUMENT, ALONG WITH THE IDEAS AND DESIGNS CONVEYED HEREIN, SHALL BE CONSIDERED INSTRUMENTS OF PROFESSIONAL SERVICE AND ARE PROPERTY OF GARVER, LLC. ANY USE, REPRODUCTION, OR DISTRIBUTION OF THIS DOCUMENT, ALONG WITH THE IDEAS AND DESIGN CONTAINED HEREIN, IS PROHIBITED UNLESS AUTHORIZED IN WRITING BY GARVER, LLC OR EXPLICITLY ALLOWED IN THE GOVERNING PROFESSIONAL SERVICES AGREEMENT FOR THIS WORK.

5125A Research Drive
Huntsville, AL 35805
(256) 534-5512

COA # 500-E
Exp: 1/31/2021

ALABAMA LICENSED No. 38108-E PROFESSIONAL ENGINEER TREY D. TIDMORE

Digitally Signed 08/21/2020

BID SET

REV.	DATE	DESCRIPTION	BY

HUNTSVILLE The Star of Alabama

CITY OF HUNTSVILLE WATER POLLUTION CONTROL
HUNTSVILLE, ALABAMA

MASTIN LAKE SS RELOCATION

STANDARD DETAILS II

JOB NO.: 19W10120
DATE: MARCH 2020
DESIGNED BY: TDT
DRAWN BY: ECB

BAR IS ONE INCH ON ORIGINAL DRAWING
0 1"
IF NOT ONE INCH ON THIS SHEET, ADJUST SCALES ACCORDINGLY.

DRAWING NUMBER
C-502

SHEET NUMBER 08

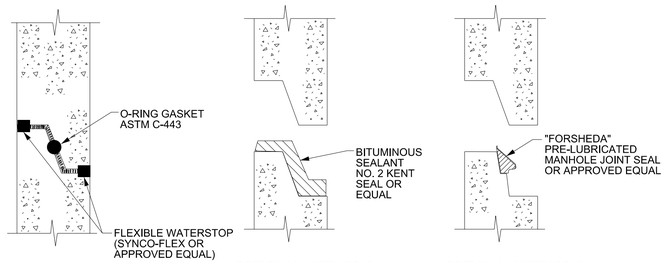

OPTIONAL METHOD 1
"O" RING TYPE GASKET

OPTIONAL METHOD 2
BITUMINOUS SEALANT

OPTIONAL METHOD 3
FORSHEDA SEAL

NOTE:
ALL JOINTS SHALL BE OF SUCH DESIGN AS WILL PERMIT EFFECTIVE JOINING WITH NO LEAKAGE AND INFILTRATION AND TO PERMIT PLACEMENT WITHOUT APPRECIABLE IRREGULARITIES ON THE INTERIOR WALL.

PRECAST MANHOLE RISER
OPTIONAL JOINTS

NOT TO SCALE

1 / C503 — OPTIONAL MANHOLE RISER JOINT DETAILS
NOT TO SCALE

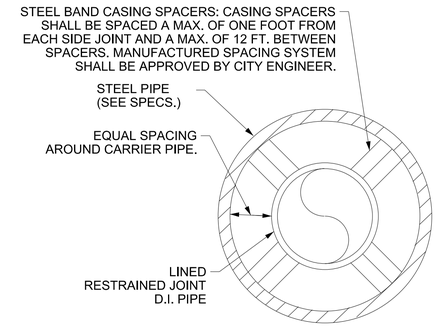

NOTES:

1. REFER TO CITY OF HUNTSVILLE STANDARD SPECIFICATIONS, SECTION 645 AND THE CONTRACT SPECIFICATIONS FOR BORE REQUIREMENTS.
2. END SEALS SHALL BE USED AT EACH END OF BORING CASING AS SPECIFIED IN THE CITY OF HUNTSVILLE STANDARD SPECIFICATIONS, SECTION 645 AND CONTRACT SPECIFICATIONS.

2 / C503 — PIPE ENCASEMENT DETAIL
NOT TO SCALE

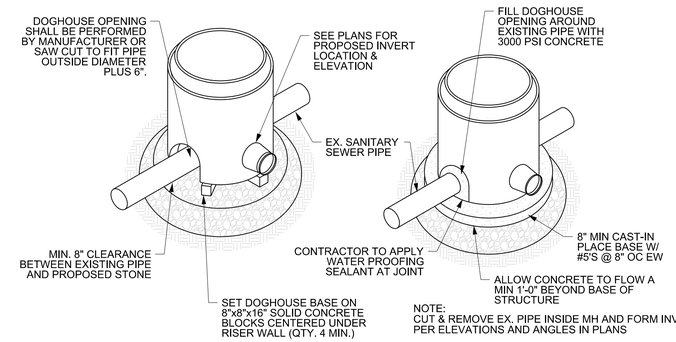

NOTE:
CUT & REMOVE EX. PIPE INSIDE MH AND FORM INVERT PER ELEVATIONS AND ANGLES IN PLANS

3 / C503 — DOGHOUSE MANHOLE DETAIL
NOT TO SCALE

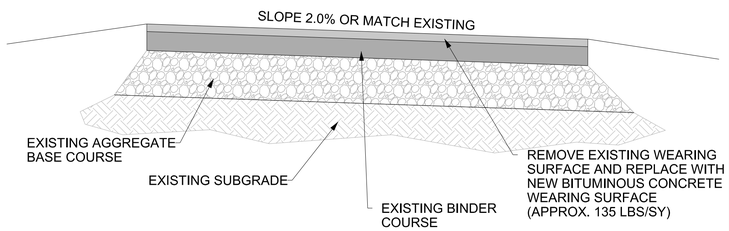

ASPHALT PAVEMENT RESURFACING

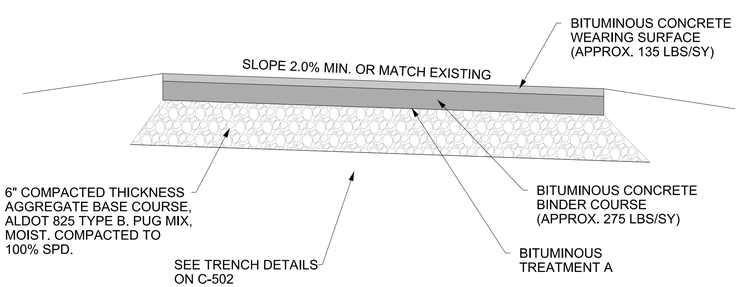

ASPHALT PAVEMENT REPLACEMENT

4 / C503 — ASPHALT PAVING DETAIL
NOT TO SCALE

GARVER

© 2018 GARVER, LLC
THIS DOCUMENT, ALONG WITH THE IDEAS AND DESIGNS CONVEYED HEREIN, SHALL BE CONSIDERED INSTRUMENTS OF PROFESSIONAL SERVICE AND ARE PROPERTY OF GARVER, LLC. ANY USE, REPRODUCTION, OR DISTRIBUTION OF THIS DOCUMENT, ALONG WITH THE IDEAS AND DESIGN CONTAINED HEREIN, IS PROHIBITED UNLESS AUTHORIZED IN WRITING BY GARVER, LLC OR EXPLICITLY ALLOWED IN THE GOVERNING PROFESSIONAL SERVICES AGREEMENT FOR THIS WORK.

5125A Research Drive
Huntsville, AL 35805
(256) 534-5512

COA # 500-E
Exp: 1/31/2020

ALABAMA LICENSED No. 38108-E PROFESSIONAL ENGINEER TREY D. TIDMORE

Digitally Signed 08/21/2020

BID SET

REV.	DATE	DESCRIPTION	BY

HUNTSVILLE The Star of Alabama

CITY OF HUNTSVILLE
WATER POLLUTION CONTROL
HUNTSVILLE, ALABAMA

MASTIN LAKE
SS RELOCATION

STANDARD DETAILS III

JOB NO.: 19W10120
DATE: MARCH 2020
DESIGNED BY: TDT
DRAWN BY: ECB

BAR IS ONE INCH ON ORIGINAL DRAWING
0 1"
IF NOT ONE INCH ON THIS SHEET, ADJUST SCALES ACCORDINGLY.

DRAWING NUMBER
C-503

SHEET NUMBER 09

HUNTSVILLE AL 8/21/2020 3:48:12 PM
WORKSPACE:GARVER
0120-C101-DT.dgn
REVISED DATE: